Shenzhen Boerane Technology Co., Ltd

# Key Locking Thread Insert

BOERANE
Thread Inserts Expert

Tel: +86-18681431102

Email: info@boeraneinsert.com

Web: www.boeraneinsert.com

Add: Building A, Yongfa industrial Park, Xingyi Road,Long gang District, Shenzhen,
Guangdong Province, China

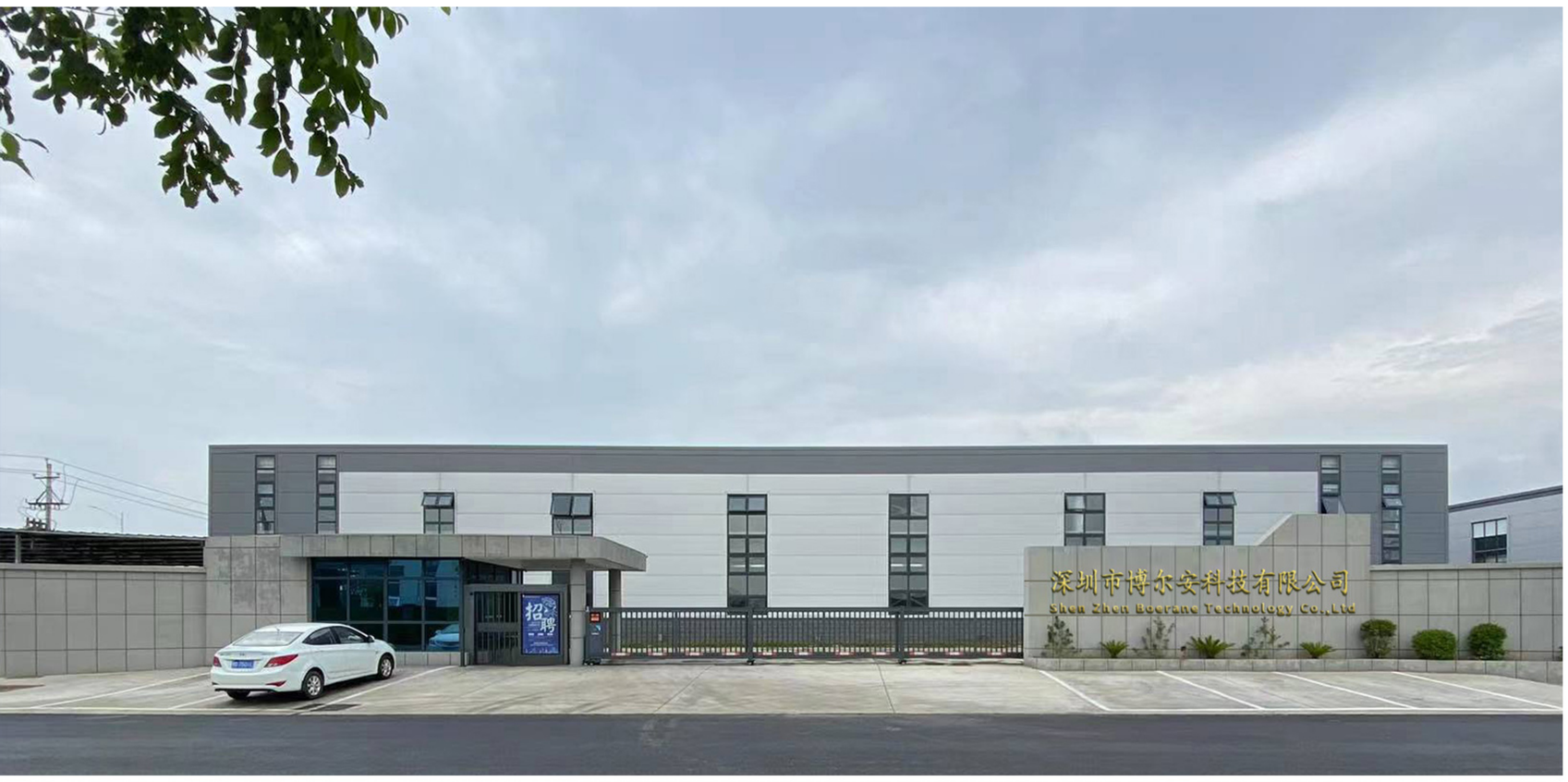


Shenzhen Boerane Technology Co., Ltd was established in 2004 as a proficient production and manufacturing enterprise that seamlessly integrates technology research, product manufacturing, and sales. Their product range includes Key Locking Inserts, Self Tapping Inserts, Wire Thread Inserts, Tailless Thread Inserts, Installation Tools, and Thread Repair Kits. With robust technical capabilities, advanced design standards, cutting-edge production equipment, and precision testing tools, the company specializes in offering comprehensive technical support throughout the entire process of threaded insert design and utilization.

Boerane is committed to technological innovation and refined product processing, having achieved success in fundamental research, new product development, process innovation, equipment enhancement, production control, quality management, and market expansion.

Their threaded insert products adhere to various international standards, catering to the aerospace, shipbuilding, high-voltage electrical components, and general mechanical sectors. The company also customizes products for European, American, and other foreign customers, following global standards. Boerane holds certifications for the “ISO9001:2015 Quality Management System”and “IATF 16949:2016‘’, demonstrating its commitment to responsible business practices.

Operating across 7000 square meters, the company comprises two plants covering 2000 and 1000 square meters, boasting an annual output exceeding 5 million USD. With over 80 employees, including 5 senior executives and a 12-member R&D team, Boerane remains dedicated to professionalism and quality.

Business goal centers on "Professional Focus, Building a Brand,” and business purpose revolves around “Quality Assurance, Reliable Price.” Upholding the values of integrity and pioneering, Boerane promises customers high-quality products and services in line with their commitment to excellence.

# Product Capability





Auto-lathe turning
OD 0.5–20mm Tol.±0.01mm
CNC lathe turning
OD 0.5–250mmTol.±0.05mm
CNC Milling
800X600mm (LxW),Tol.±0.05mm
Grinding: Tol.±0.002mm
Screw heading & rolling:
Metric M8-M36
Unified Imperial #0-2"
Stamping: 1200 T max





01 Automatic Lathe

02 CNC Lathe

03 CNC Machine

04 Screw Machine

05 Stamping Equipment

06 Injection machine

07 Ultraprecision Machining

08 Precision Grinding

BOERANE
Thread Inserts Expert

# KEY LOCKING INSERT
## Series KNCM

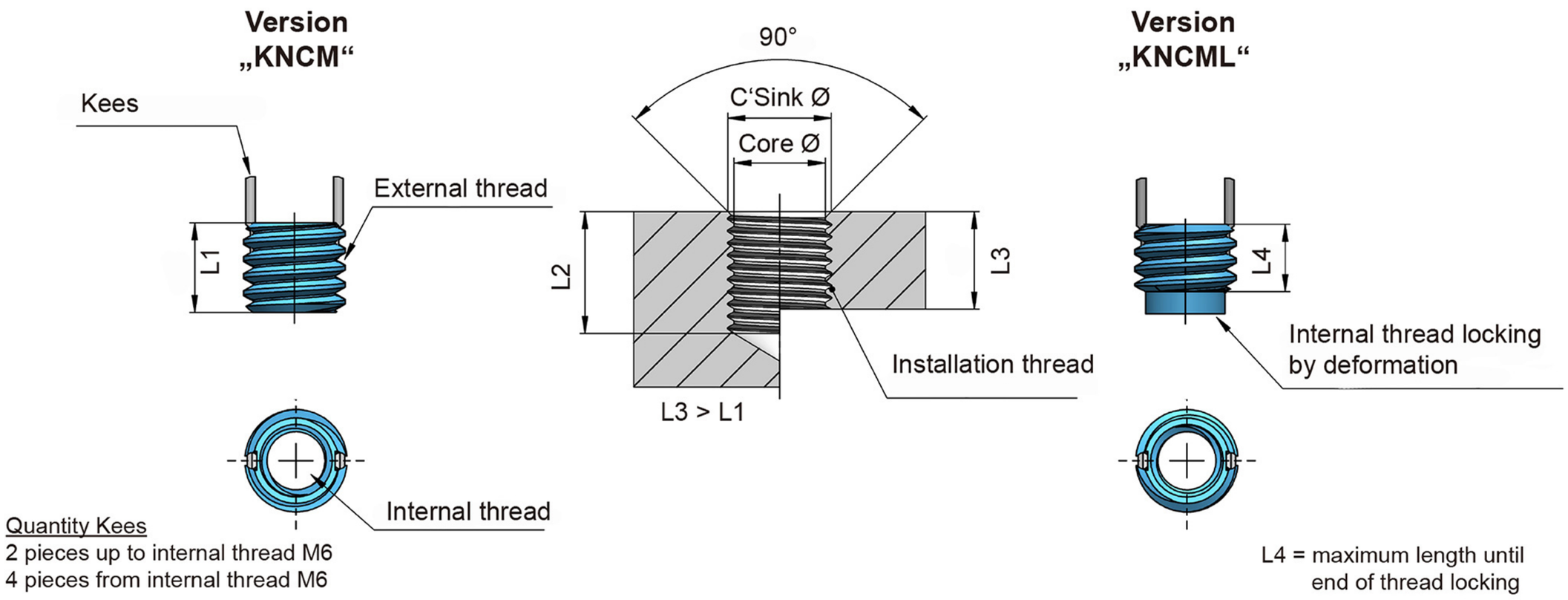


| Part number | | Dimensions | | | | |
|---|---|---|---|---|---|---|
| Standard “KNCM“ | Self-locking “KNCML“ | Internal thread Ø Tol.- 5H | External thread Ø Tol.- 4h | Shear engagement mm² | L1 ± 0,25 | L4 |
| KNCM2X0,4 | | M2X0,4 | M4X0,7 | 16,5 | 3 | |
| | KNCML2X0,4 | | | 10,3 | | 2,2 |
| KNCM2,5X0,45 | | M2,5X0,45 | M4,5X0,75 | 26,5 | 3,8 | |
| | KNCML2,5X0,45 | | | 15,9 | | 2,7 |
| KNCM3X0,5 | | M3X0,5 | M5X0,8 | 33,1 | 4,25 | |
| | KNCML3X0,5 | | | 21,4 | | 3,1 |
| KNCM4X0,7 | | M4X0,7 | M6X0,75 | 58,4 | 5,25 | |
| | KNCML4X0,7 | | | 42,9 | | 4,1 |

| Part number | Installation dimensions | | | | | Removal dimensions | |
|---|---|---|---|---|---|---|---|
| | modified Core-Ø* | C’Sink-Ø +0,25 | Installation thread | | Hand installation tool part-no. | Drill | |
| | | | Thread Tol.- 6H | Depth L2 min. | | Ø | Depth |
| KNCM2X0,4 / KNCML2X0,4 | 3,4 +0,080 -0,025 | 4,1 | M4X0,7 | 4,0 | KRTM2-01 | 2,8 | 2,00 |
| KNCM2,5X0,45 / KNCML2,5X0,45 | 3,9 +0,080 -0,025 | 4,6 | M4,5X0,75 | 5,0 | KRTM2,5-01 | 3,0 | 2,00 |
| KNCM3X0,5 / KNCML3X0,5 | 4,4 +0,080 -0,025 | 5,1 | M5X0,8 | 5,5 | KRTM3-01 | 3,5 | 2,25 |
| KNCM4X0,7 / KNCML4X0,7 | 5,5 +0,080 -0,025 | 6,1 | M6X0,75 | 6,5 | KRTM4-01 | 4,6 | 2,50 |

*the core Ø are different from DIN 13-20 / 21 / 22

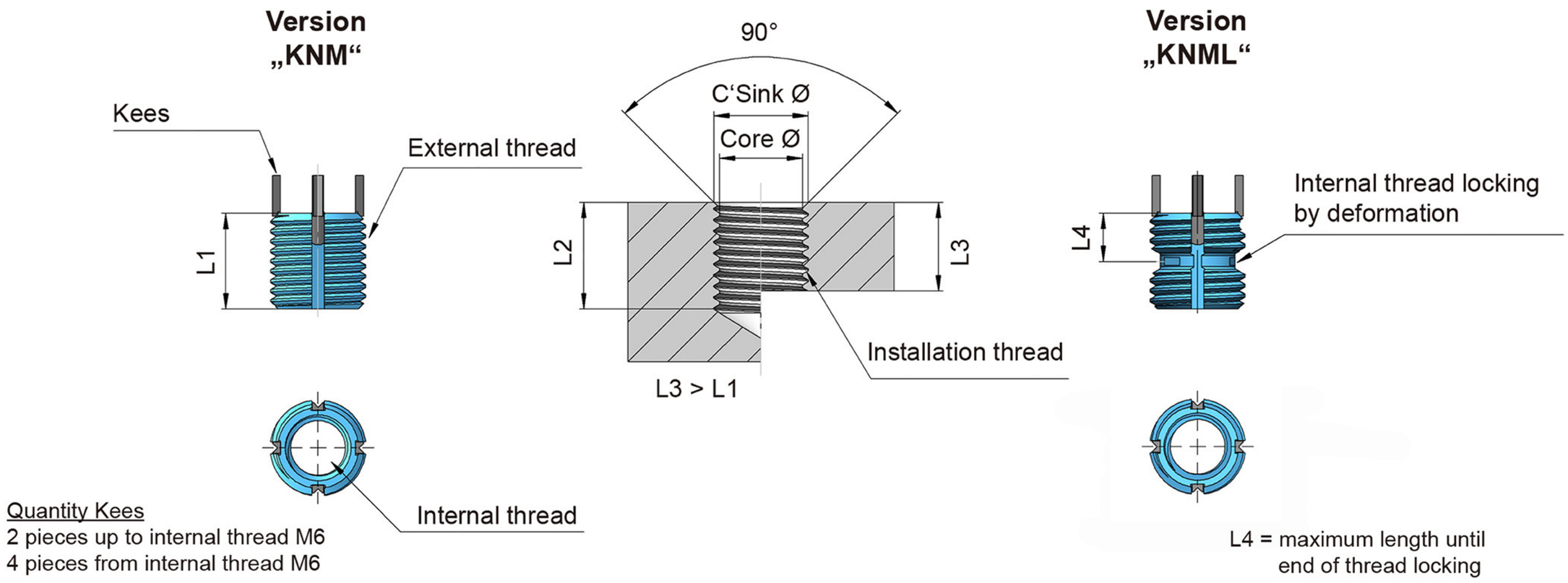


| Part number | | Dimensions | | | | |
|---|---|---|---|---|---|---|
| **Standard "KNM"** | **Self-locking "KNML"** | **Internal thread Ø Tol.- 5H** | **External thread Ø Tol.- 4h** | **Shear engagement mm²** | **L1 ± 0,3** | **L4** |
| KNM5X0,8 | | M5X0,8 | M8X1,25 | 104,9 | 8 | |
| | KNML5X0,8 | | | 83,1 | | 7,6 |
| KNM6X1,0 | | M6X1,0 | M10X1,25 | 177,7 | 10 | |
| | KNML6X1,0 | | | 152,7 | | 8,2 |
| KNM8X1,25 | | M8X1,25 | M12X1,25 | 266,7 | 12 | |
| | KNML8X1,25 | | | 242,5 | | 9,5 |
| KNM10X1,5 | | M10X1,5 | M14X1,5 | 341,6 | 14 | |
| | KNML10X1,5 | | | 316,4 | | 10,0 |
| KNM12X1,75 | | M12X1,75 | M16X1,5 | 470,2 | 16 | |
| | KNML12X1,75 | | | 441,4 | | 11,2 |

| Part number | Installation dimensions | | | | | Removal dimensions | |
|---|---|---|---|---|---|---|---|
| | **modified Core-Ø*** | **C'Sink-Ø +0,25** | **Installation thread** | | **Hand installation tool part-no.** | **Drill** | |
| | | | **Thread Tol.- 6H** | **Depth L2 min.** | | **Ø** | **Depth** |
| KNM5X0,8 | $6{,}90^{+0{,}100}_{-0{,}025}$ | 8,25 | M8X1,25 | 9,5 | KRTM5-01/ KNT01-M5X0,8AU | 5,5 | 4,00 |
| KNML5X0,8 | | | | | | | |
| KNM6X1,0 | $8{,}80^{+0{,}100}_{-0{,}025}$ | 10,25 | M10X1,25 | 11,5 | KRTM6-01/ KNT01-M6X1,0AU | 7,5 | 4,75 |
| KNML6X1,0 | | | | | | | |
| KNM8X1,25 | $10{,}80^{+0{,}100}_{-0{,}025}$ | 12,25 | M12X1,25 | 13,5 | KRTM8-01/ KNT01-M8X1,25AU | 9,5 | 4,75 |
| KNML8X1,25 | | | | | | | |
| KNM10X1,5 | $12{,}80^{+0{,}130}_{-0{,}025}$ | 14,25 | M14X1,5 | 15,5 | KRTM10-01/ KNT01-M10X1,5AU | 11,5 | 4,75 |
| KNML10X1,5 | | | | | | | |
| KNM12X1,75 | $14{,}75^{+0{,}130}_{-0{,}025}$ | 16,25 | M16X1,5 | 17,5 | KRTM12-01/ KNT01-M12X1,75AU | 13,5 | 4,75 |
| KNML12X1,75 | | | | | | | |
| KNM12X1,75 | $14{,}75^{+0{,}130}_{-0{,}025}$ | 16,25 | M16X1,5 | 17,5 | KRTM12-01/ KNT01-M12X1,75AU | 13,5 | 4,75 |
| KNML12X1,75 | | | | | | | |

*the core Ø are different from DIN 13-20 / 21 / 22

# KEY LOCKING INSERT
## Series KNHM

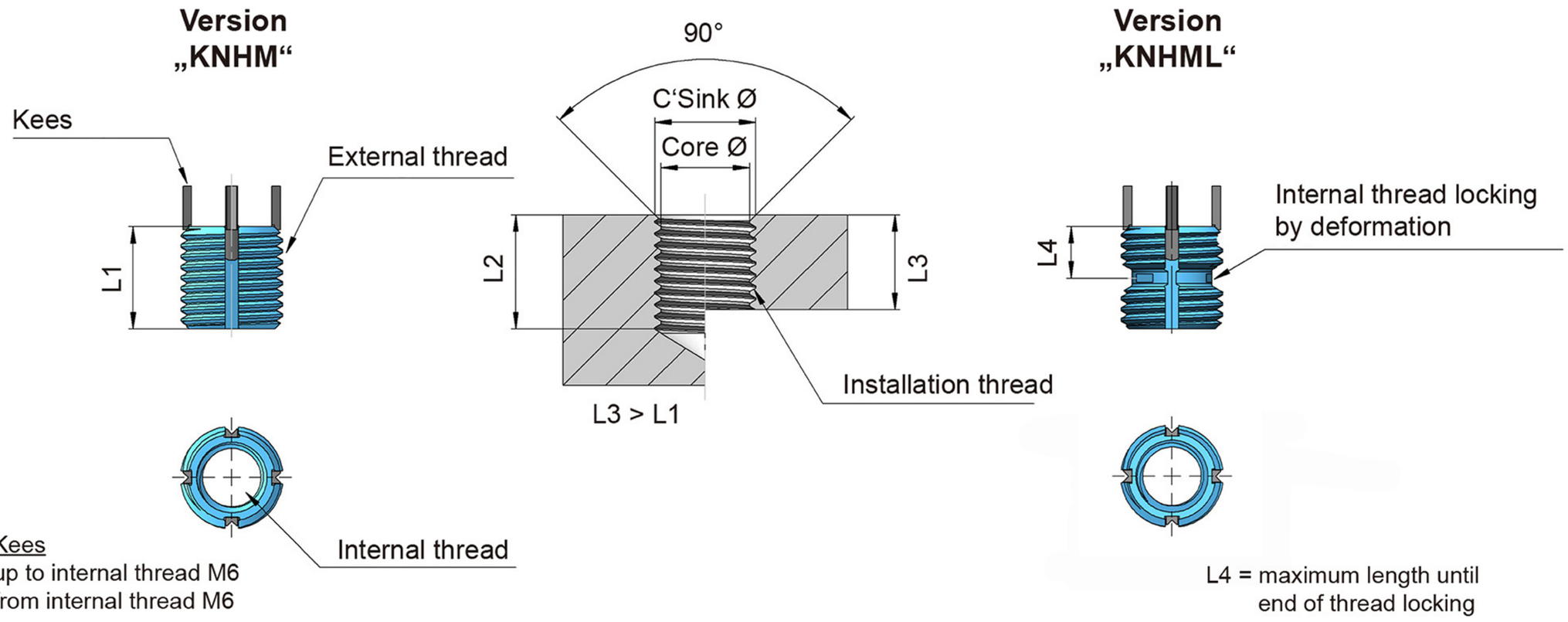


| Part number | | Dimensions | | | | |
|---|---|---|---|---|---|---|
| **Standard "KNHM"** | **Self-locking "KNHML"** | **Internal thread Ø Tol.- 5H** | **External thread Ø Tol.- 4h** | **Shear engagement mm²** | **L1 ± 0,3** | **L4** |
| KNHM4X0,7 | | M4X0,7 | M8X1,25 | 104,9 | 8 | |
| | KNHML4X0,7 | | | 83,1 | | 8,0 |
| KNHM5X0,8 | | M5X0,8 | M10X1,25 | 177,7 | 10 | |
| | KNHML5X0,8 | | | 152,7 | | 8,7 |
| KNHM6X1,0 | | M6X1,0 | M12X1,25 | 266,7 | 12 | |
| | KNHML6X1,0 | | | 242,5 | | 9,5 |
| KNHM8X1,25 | | M8X1,25 | M14X1,5 | 341,6 | 14 | |
| | KNHML8X1,25 | | | 316,4 | | 10,0 |
| KNHM10X1,5 | | M10X1,5 | M16X1,5 | 470,2 | 16 | |
| | KNHML10X1,5 | | | 441,4 | | 10,0 |
| KNHM12X1,75 | | M12X1,75 | M18X1,5 | 608,5 | 18 | |
| | KNHML12X1,75 | | | 561,8 | | 10,7 |

| Part number | Installation dimensions | | | | | Removal dimensions | |
|---|---|---|---|---|---|---|---|
| | modified Core-Ø* | C'Sink-Ø +0,25 | Installation thread | | Hand installation tool part-no. | Drill | |
| | | | Thread Tol.- 6H | Depth L2 min. | | Ø | Depth |
| KNHM4X0,7 / KNHML4X0,7 | 6,90 +0,100 -0,025 | 8,25 | M8X1,25 | 9,5 | KRTM4-02 / KNT01-HM4X0,7AU | 5,5 | 4,00 |
| KNHM5X0,8 / KNHML5X0,8 | 8,80 +0,100 -0,025 | 10,25 | M10X1,25 | 12,5 | KRTM5-02 / KNT01-HM5X0,8AU | 7,5 | 4,75 |
| KNHM6X1,0 / KNHML6X1,0 | 10,80 +0,100 -0,025 | 12,25 | M12X1,25 | 14,5 | KRTM6-02 / KNT01-HM6X1,0AU | 9,5 | 4,75 |
| KNHM8X1,25 / KNHML8X1,25 | 12,80 +0,130 -0,025 | 14,25 | M14X1,5 | 16,5 | KRTM8-02 / KNT01-HM8X1,25AU | 11,5 | 4,75 |
| KNHM10X1,5 / KNHML10X1,5 | 14,75 +0,130 -0,025 | 16,25 | M16X1,5 | 18,5 | KRTM10-02 / KNT01-HM10X1,5AU | 13,5 | 4,75 |
| KNHM12X1,75 / KNHML12X1,75 | 16,75 +0,130 -0,025 | 18,25 | M18X1,5 | 20,5 | KRTM12-02 / KNT01-HM12X1,75AU | 15,5 | 4,75 |

*the core Ø are different from DIN 13-20 / 21 / 22

# KEY LOCKING INSERT
## Serie KNHM

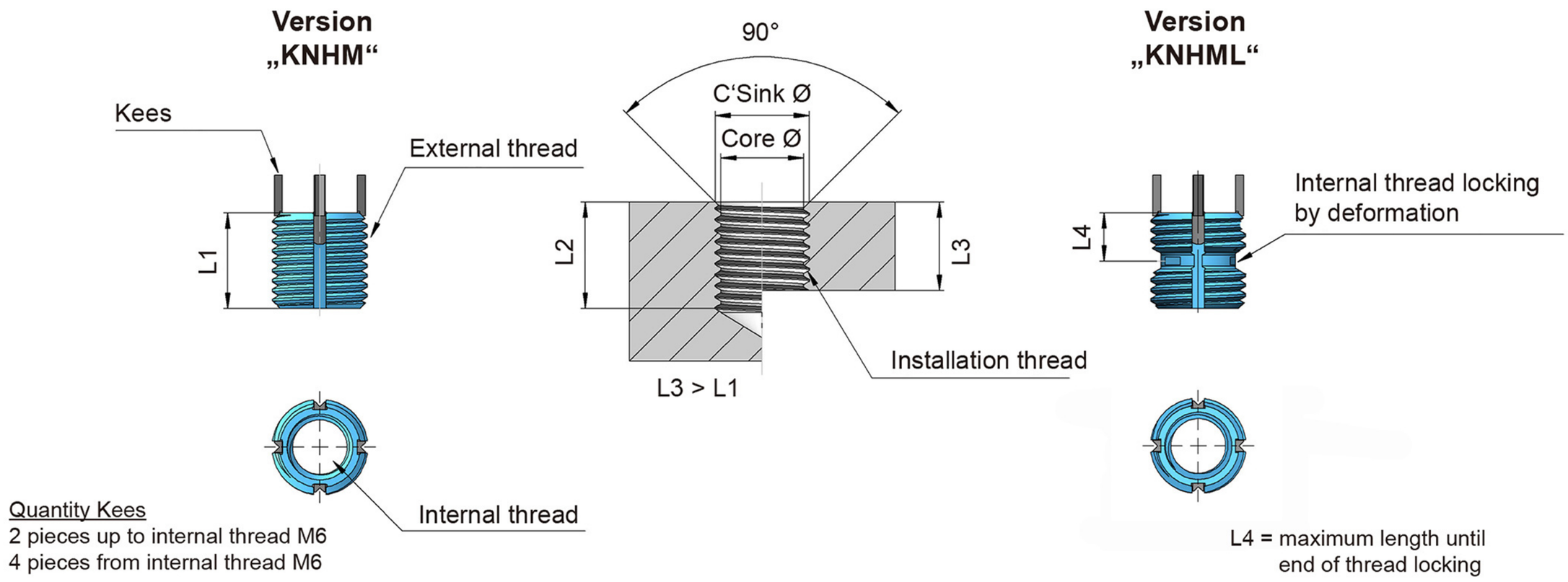


| Part number | | Dimensions | | | | |
|---|---|---|---|---|---|---|
| **Standard “KNHM”** | **Self-locking “KNHML“** | **Internal thread Ø Tol.- 5H** | **External thread Ø Tol.- 4h** | **Shear engagement mm²** | **L1 ± 0,3** | **L4** |
| KNHM14X2,0 | | M14X2,0 | M20X1,5 | 770,5 | 20 | |
| | KNHML14X2,0 | | | 724,4 | | 12,4 |
| KNHM16X2,0 | | M16X2,0 | M22X1,5 | 896,8 | 22 | |
| | KNHML16X2,0 | | | 855,2 | | 12,4 |
| KNHM18X1,5 | | M18X1,5 | M24X1,5 | 1084,4 | 24 | |
| | KNHML18X1,5 | | | 1051,5 | | 16,8 |
| KNHM20X2,5 | | M20X2,5 | M30X2,0 | 1774,3 | 30 | |
| | KNHML20X2,5 | | | 1736,4 | | 17,5 |
| KNHM24X3,0 | | M24X3,0 | M33X2,0 | 2189,4 | 33 | |
| | KNHML24X3,0 | | | 2161,9 | | 19,0 |

| Part number | Installation dimensions | | | | | Removal dimensions | |
|---|---|---|---|---|---|---|---|
| | **modified Core-Ø*** | **C’Sink-Ø +0,25** | **Installation thread** | | **Hand installation tool part-no.** | **Drill** | |
| | | | **Thread Tol.- 6H** | **Depth L2 min.** | | **Ø** | **Depth** |
| KNHM14X2,0 / KNHML14X2,0 | $18,75^{+0,130}_{-0,025}$ | 20,25 | M20X1,5 | 22,5 | KRTM14-02 / KNT03-HM14X2,0AU | 17,50 | 4,75 |
| KNHM16X2,0 / KNHML16X2,0 | $20,50^{+0,130}_{-0,025}$ | 22,25 | M22X1,5 | 24,5 | KRTM16-02 / KNT03-HM16X2,0AU | 17,75 | 6,35 |
| KNHM18X1,5 / KNHML18X1,5 | $22,50^{+0,130}_{-0,025}$ | 24,25 | M24X1,5 | 26,5 | KRTM18-02 / KNT03-HM18X1,5AU | 19,75 | 6,35 |
| KNHM20X2,5 / KNHML20X2,5 | $28,00^{+0,130}_{-0,025}$ | 30,25 | M30X2,0 | 34,5 | KRTM20-02 / KNT03-HM20X2,5AU | 25,75 | 6,35 |
| KNHM24X3,0 / KNHML24X3,0 | $31,00^{+0,130}_{-0,025}$ | 33,25 | M33X2,0 | 37,5 | KNT03-HM24X3,0AU | 28,75 | 6,35 |

*the core Ø are different from DIN 13-20 / 21 / 22

# KEY LOCKING INSERT
## Series KNCA

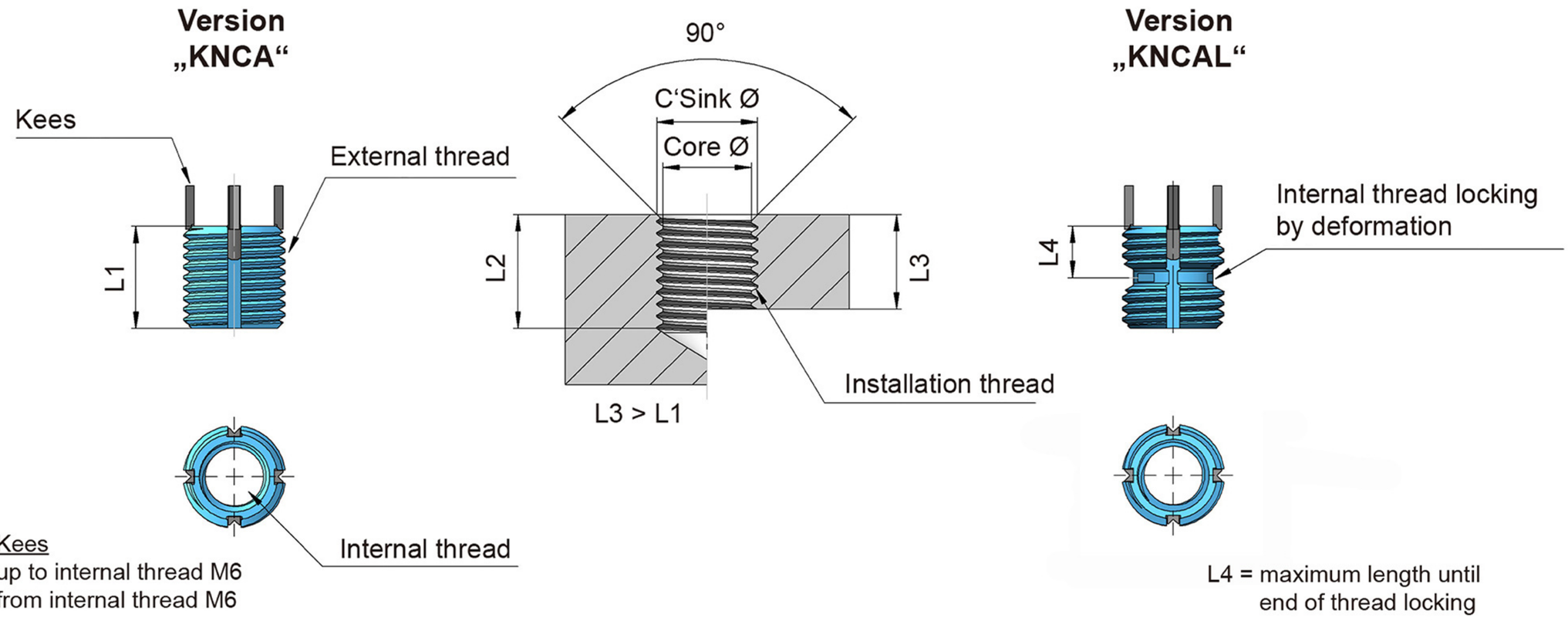


| Part number | | Dimensions | | | | |
|---|---|---|---|---|---|---|
| Standard “KNCA” | Self-locking “KNCAL” | Internal thread Ø | External thread Ø | Shear engagement inch² (mm²) | L1 inch (mm) | L4 inch (mm) |
| KNCA0256J | | 2-56” UNJC-3B | 8-32” UNC-3A | 0,0157 (10,1) | 0,12 (3,05) | 0,088 (2,24) |
| | KNCAL0256J | | | 0,0157 (10,1) | | 0,088 (2,24) |
| KNCA0440J | | 4-40” UNJC-3B | 10-32” UNF-2A | 0,0302 (19,5) | 0,17 (4,32) | 0,125 (3,18) |
| | KNCAL0440J | | | 0,0302 (19,5) | | 0,125 (3,18) |
| KNC0632J | | 6-32” UNJC-3B | 12-28” UNF-2A | 0,0329 (21,2) | 0,17 (4,32) | 0,125 (3,18) |
| | KNCL0632J | | | 0,0329 (21,2) | | 0,125 (3,18) |
| KNCA0832J | | 8-32” UNJC-3B | 1/4-28” UNF-2A | 0,0669 (43,2) | 0,22 (5,59) | 0,175 (4,45) |
| | KNCAL0832J | | | 0,0669 (43,2) | | 0,175 (4,45) |

| Part number | Installation dimensions | | | | | Removal dimensions | |
|---|---|---|---|---|---|---|---|
| | modified Core-Ø* inch | C’Sink-Ø inch | Installation thread | | Hand installation tool part-no. | Drill | |
| | | | Thread | L2 min. inch (mm) | | Ø inch (mm) | Depth inch (mm) |
| KNCA0256J | .134 +0,003 -0,001 | .166 +.001 - .000 | 8-32 UNC-2B | 0,140 (3,56) | TKNC02 | 0,113 (2,87) | 1/16 (1,59) |
| KNCAL0256J | | | | | | | |
| KNCA0440J | .161 +0,003 -0,001 | .194 +.001 - .000 | 10-32 UNF-2B | 0,160 (4,06) | TKNC04 | 0,136 (3,45) | 3/32 (2,38) |
| KNCAL0440J | | | | | | | |
| KNC0632J | .187 +0,003 -0,001 | .220 +.001 - .000 | 12-28 UNF-2B | 0,160 (4,06) | TKNC06 | 0,159 (4,04) | 3/32 (2,38) |
| KNCL0632J | | | | | | | |
| KNCA0832J | .228 +0,003 -0,001 | .255 +.001 - .000 | 1/4-28 UNF-2B | 0,210 (5,33) | TKNC08 | 0,199 (5,05) | 1/8 (3,18) |
| KNCAL0832J | | | | | | | |

*the core Ø are different from SAE AS 8879

# KEY LOCKING INSERT
## Series KN

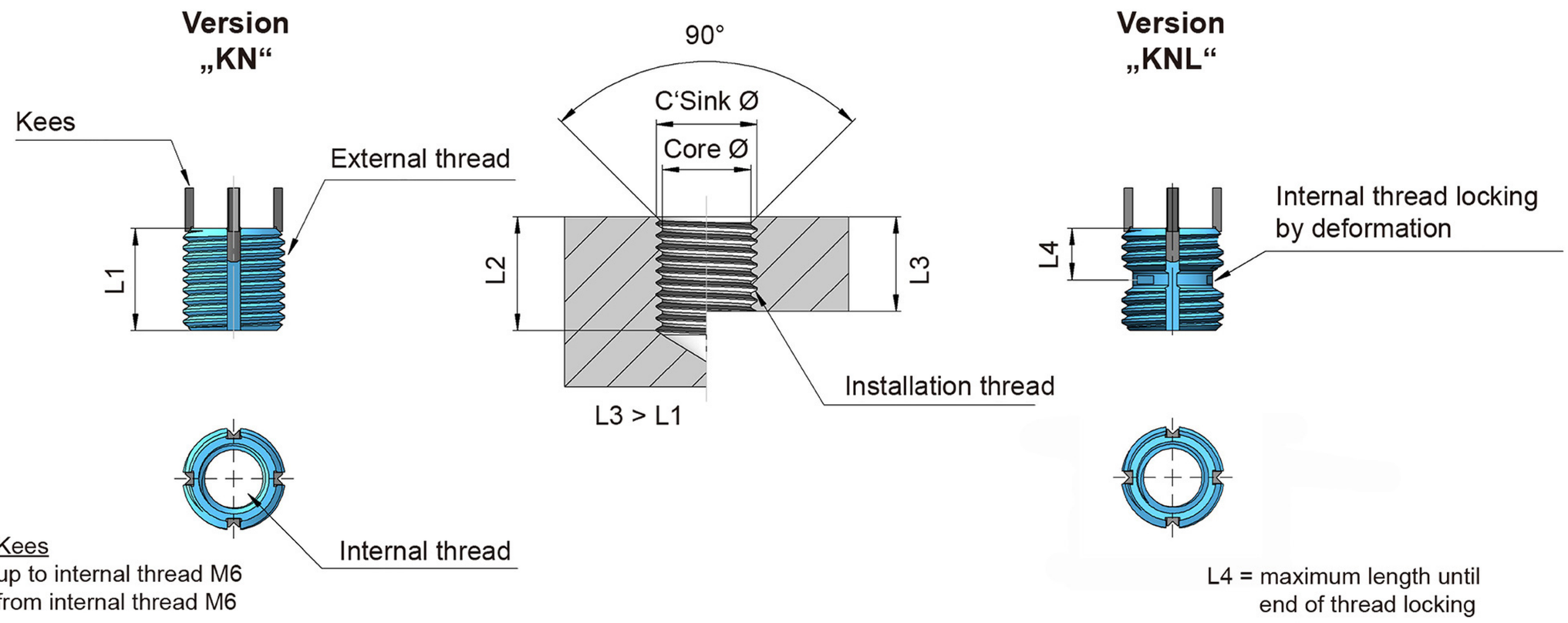


| Part number | | Dimensions | | | | |
|---|---|---|---|---|---|---|
| Standard “KN” | Self-locking “KNL“ | Internalthread Ø Tol.- 3B | External thread Ø Tol.- 2A mod. | Shear engagement inch² (mm²) | L1 inch (mm) | L4 inch (mm) |
| KN1032J | | 10-32 | 5/16-18 | 0,1517 (97,9) | 0,31 (7,87) | |
| | KNL1032J | | | 0,0945 (61,0) | | 0,31 (7,87) |
| KN1024J | | 10-24 | 5/16-18 | 0,1517 (97,9) | 0,31 (7,87) | |
| | KNL1024J | | | 0,0945 (61,0) | | 0,31 (7,87) |
| KN428J | | 1/4-28 | 3/8-16 | 0,2371 (153,0) | 0,37 (9,40) | |
| | KNL428J | | | 0,1726 (111,4) | | 0,33 (8,38) |
| KN420J | | 1/4-20 | 3/8-16 | 0,2371 (153,0) | 0,37 (9,40) | |
| | KNL420J | | | 0,1726 (111,4) | | 0,36 (9,14) |
| KN524J | | 5/16-24 | 7/16-14 | 0,3049 (196,7) | 0,43 (10,9) | |
| | KNL524J | | | 0,2321 (149,7) | | 0,34 (8,64) |
| KN518J | | 5/16-18 | 7/16-14 | 0,3049 (196,7) | 0,43 (10,9) | |
| | KNL518J | | | 0,2321 (149,7) | | 0,37 (9,40) |

| Part number | Installation dimensions | | | | | Removal dimensions | |
|---|---|---|---|---|---|---|---|
| | modified Core-Ø* inch (mm) | C’Sink-Ø inch +0,01 (mm) +0,25 | Installation thread | | Hand installation tool part-no. | Drill | |
| | | | Thread Tol. - 2B | L2 min. inch (mm) | | Ø inch (mm) | Depth inch (mm) |
| KN1032J | 0,272 (6,91) | 0,323 (8,20) | 5/16-18 | 0,37 (9,4) | TD1032L | 7/32 (5,56) | 5/32 (3,97) |
| KNL1032J | | | | | | | |
| KN1024J | 0,272 (6,91) | 0,323 (8,20) | 5/16-18 | 0,37 (9,4) | TD1024L | 7/32 (5,56) | 5/32 (3,97) |
| KNL1024J | | | | | | | |
| KN428J | 0,332 (8,43) | 0,385 (9,78) | 3/8-16 | 0,43 (10,9) | TD428L | 9/32 (7,14) | 3/16 (4,76) |
| KNL428J | | | | | | | |
| KN420J | 0,332 (8,43) | 0,385 (9,78) | 3/8-16 | 0,43 (10,9) | TD420L | 9/32 (7,14) | 3/16 (4,76) |
| KNL420J | | | | | | | |
| KN524J | 0,397 (10,08) | 0,447 (11,35) | 7/16-14 | 0,50 (12,7) | TD524L | 11/32 (8,73) | 3/16 (4,76) |
| KNL524J | | | | | | | |
| KN518J | 0,397 (10,08) | 0,447 (11,35) | 7/16-14 | 0,50 (12,7) | TD518L | 11/32 (8,73) | 3/16 (4,76) |
| KNL518J | | | | | | | |

*the core Ø are different from SAE AS 8879

# KEY LOCKING INSERT
## Series KN

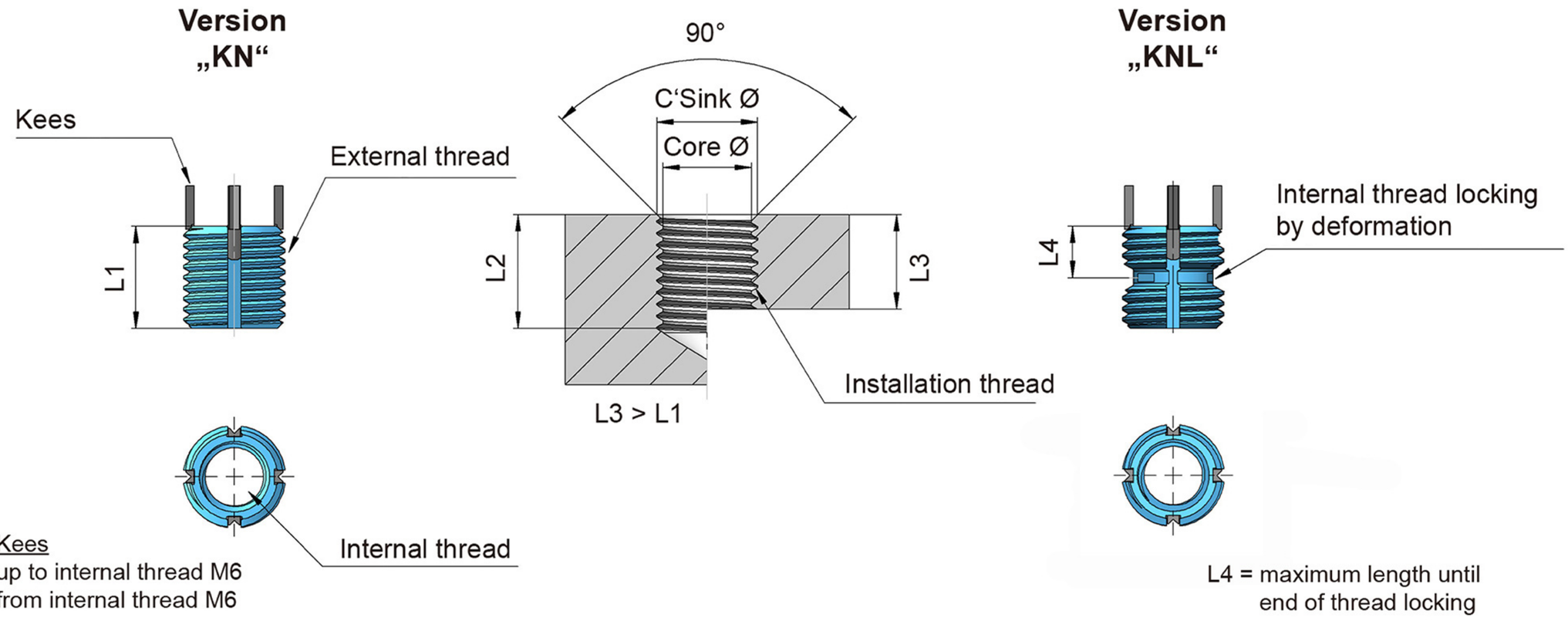


| Part number | | Dimensions | | | | |
|---|---|---|---|---|---|---|
| Standard “KN” | Self-locking “KNL“ | Internal thread Ø Tol.- 3B | External thread Ø Tol.- 2A mod. | Shear engagement inch² (mm²) | L1 inch (mm) | L4 inch (mm) |
| KN624J | | 3/8-24 | 1/2-13 | 0,4299 (277,4) | 0,50 (12,7) | |
| | KNL624J | | | 0,3366 (217,2) | | 0,36 (9,14) |
| KN616J | | 3/8-16 | 1/2-13 | 0,4299 (277,4) | 0,50 (12,7) | |
| | KNL616J | | | 0,3366 (217,2) | | 0,40 (10,16) |
| KN720J | | 7/16-20 | 9/16-12 | 0,5665 (365,5) | 0,56 (14,2) | |
| | KNL720J | | | 0,4606 (297,2) | | 0,41 (10,41) |
| KN714J | | 7/16-14 | 9/16-12 | 0,5665 (365,5) | 0,56 (14,2) | |
| | KNL714J | | | 0,4606 (297,2) | | 0,45 (11,43) |
| KN820J | | 1/2-20 | 5/8-11 | 0,7175 (462,9) | 0,62 (15,8) | |
| | KNL820J | | | 0,5906 (381,0) | | 0,42 (10,67) |
| KN813J | | 1/2-13 | 5/8-11 | 0,7175 (462,9) | 0,62 (15,8) | |
| | KNL813J | | | 0,5906 (381,0) | | 0,47 (11,94) |

| Part number | Installation dimensions | | | | | Removal dimensions | |
|---|---|---|---|---|---|---|---|
| | modified Core-Ø* inch (mm) | C’Sink-Ø inch +0,01 (mm) +0,25 | Installation thread | | Hand installation tool part-no. | Drill | |
| | | | Thread Tol.- 2B | L2 min. inch (mm) | | Ø inch (mm) | Depth inch (mm) |
| KN624J | 0,453 (11,51) | 0,510 (12,95) | 1/2-13 | 0,56 (14,2) | TD624L | 13/32 (10,32) | 3/16 (4,76) |
| KNL624J | | | | | | | |
| KN616J | 0,453 (11,51) | 0,510 (12,95) | 1/2-13 | 0,56 (14,2) | TD616L | 13/32 (10,32) | 3/16 (4,76) |
| KNL616J | | | | | | | |
| KN720J | 0,516 (13,11) | 0,572 (14,53) | 9/16-12 | 0,62 (15,7) | TD720L | 15/32 (11,91) | 3/16 (4,76) |
| KNL720J | | | | | | | |
| KN714J | 0,516 (13,11) | 0,572 (14,53) | 9/16-12 | 0,62 (15,7) | TD714L | 15/32 (11,91) | 3/16 (4,76) |
| KNL714J | | | | | | | |
| KN820J | 0,578 (14,68) | 0,635 (16,13) | 5/8-11 | 0,68 (17,3) | TD820L | 17/32 (13,49) | 3/16 (4,76) |
| KNL820J | | | | | | | |
| KN813J | 0,578 (14,68) | 0,635 (16,13) | 5/8-11 | 0,68 (17,3) | TD813L | 17/32 (13,49) | 3/16 (4,76) |
| KNL813J | | | | | | | |

*the core Ø are different from SAE AS 8879

# KEY LOCKING INSERT
## Series KNH

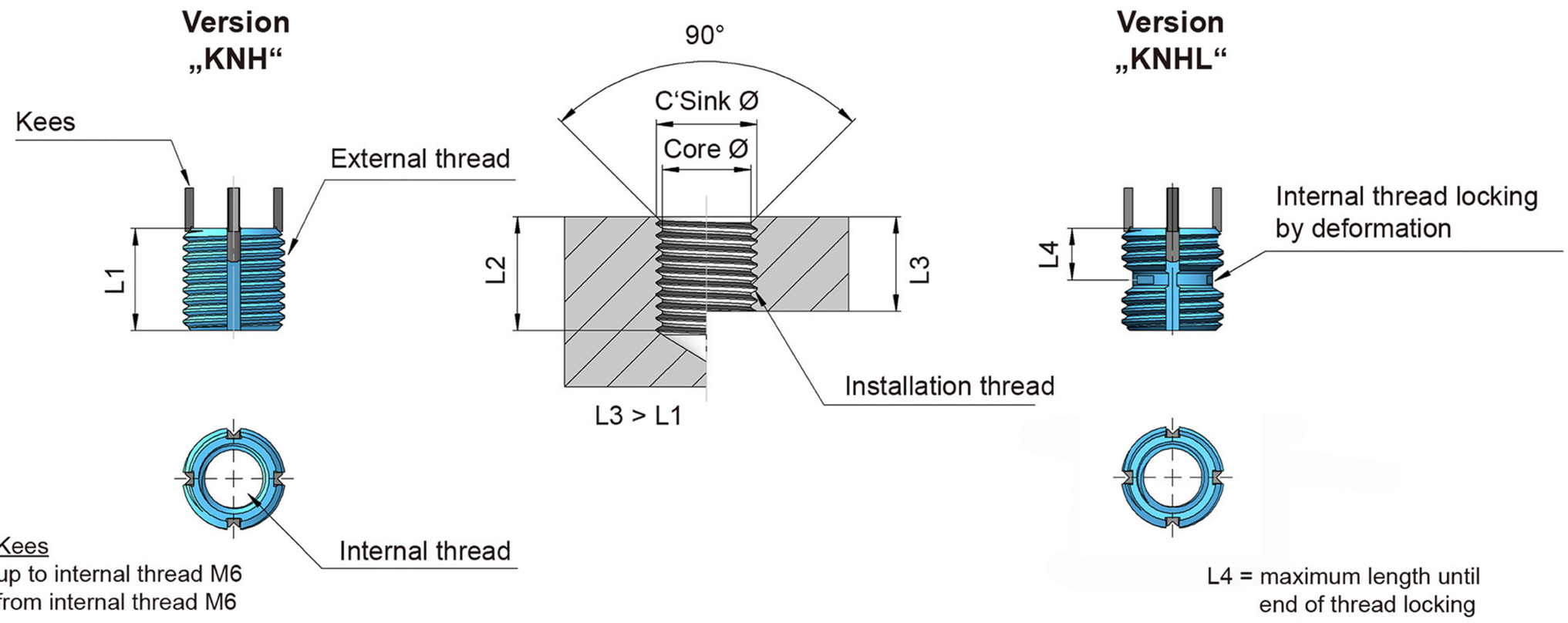


| Part number | | Dimensions | | | | |
|---|---|---|---|---|---|---|
| Standard "KNH" | Self-locking "KNHL" | internal-thread Ø Tol.- 3B | outher-thread Ø Tol.- 2A mod. | Shear engagement inch² (mm²) | L1 inch (mm) | L4 inch (mm) |
| KNH0832J | | 8-32 | 5/16-18 | 0,1517 (97,87) | 0,31 (7,87) | |
| | KNHL0832J | | | 0,0945 (60,97) | | 0,29 (7,37) |
| KNH1032J | | 10-32 | 3/8-16 | 0,1901 (122,7) | 0,31 (7,87) | |
| | KNHL1032J | | | 0,1156 (74,6) | | 0,31 (7,87) |
| KNH1024J | | 10-24 | 3/8-16 | 0,1901 (122,7) | 0,31 (7,87) | |
| | KNHL1024J | | | 0,1156 (74,6) | | 0,31 (7,87) |
| KNH428J | | 1/4-28 | 7/16-14 | 0,2842 (183,4) | 0,37 (9,40) | |
| | KNHL428J | | | 0,1970 (127,1) | | 0,33 (8,38) |
| KNH420J | | 1/4-20 | 7/16-14 | 0,2842 (183,4) | 0,37 (9,40) | |
| | KNHL420J | | | 0,1970 (127,1) | | 0,36 (9,14) |
| KNH524J | | 5/16-24 | 1/2-13 | 0,3588 (231,5) | 0,43 (10,9) | |
| | KNHL524J | | | 0,2608 (168,3) | | 0,34 (8,64) |

| Part number | Installation dimensions | | | | | Removal dimensions | |
|---|---|---|---|---|---|---|---|
| | modified Core-Ø* inch (mm) | C'Sink-Ø inch +0,01 (mm) +0,25 | Installation thread | | Hand installation tool part-no. | Drill | |
| | | | Thread Tol. - UNC 2B | L2 min. inch (mm) | | Ø inch (mm) | Depth inch (mm) |
| KNH0832J | 0,272 (6,91) | 0,323 (8,20) | 5/16-18 | 0,37 (9,4) | THD0832L | 7/32 (5,56) | 1/8 (3,18) |
| KNHL0832J | | | | | | | |
| KNH1032J | 0,332 (8,43) | 0,385 (9,78) | 3/8-16 | 0,37 (9,4) | THD1032L | 9/32 (7,14) | 1/8 (3,18) |
| KNHL1032J | | | | | | | |
| KNH1024J | 0,332 (8,43) | 0,385 (9,78) | 3/8-16 | 0,37 (9,4) | THD1024L | 9/32 (7,14) | 1/8 (3,18) |
| KNHL1024J | | | | | | | |
| KNH428J | 0,397 (10,08) | 0,447 (11,35) | 7/16-14 | 0,43 (10,9) | THD428L | 11/32 (8,73) | 3/16 (4,76) |
| KNHL428J | | | | | | | |
| KNH420J | 0,397 (10,08) | 0,447 (11,35) | 7/16-14 | 0,43 (10,9) | THD420L | 11/32 (8,73) | 3/16 (4,76) |
| KNHL420J | | | | | | | |
| KNH524J | 0,453 (11,51) | 0,510 (12,95) | 1/2-13 | 0,50 (12,7) | THD524L | 13/32 (10,32) | 3/16 (4,76) |
| KNHL524J | | | | | | | |

*the core Ø are different from SAE AS 8879

# KEY LOCKING INSERT
## Series KNH

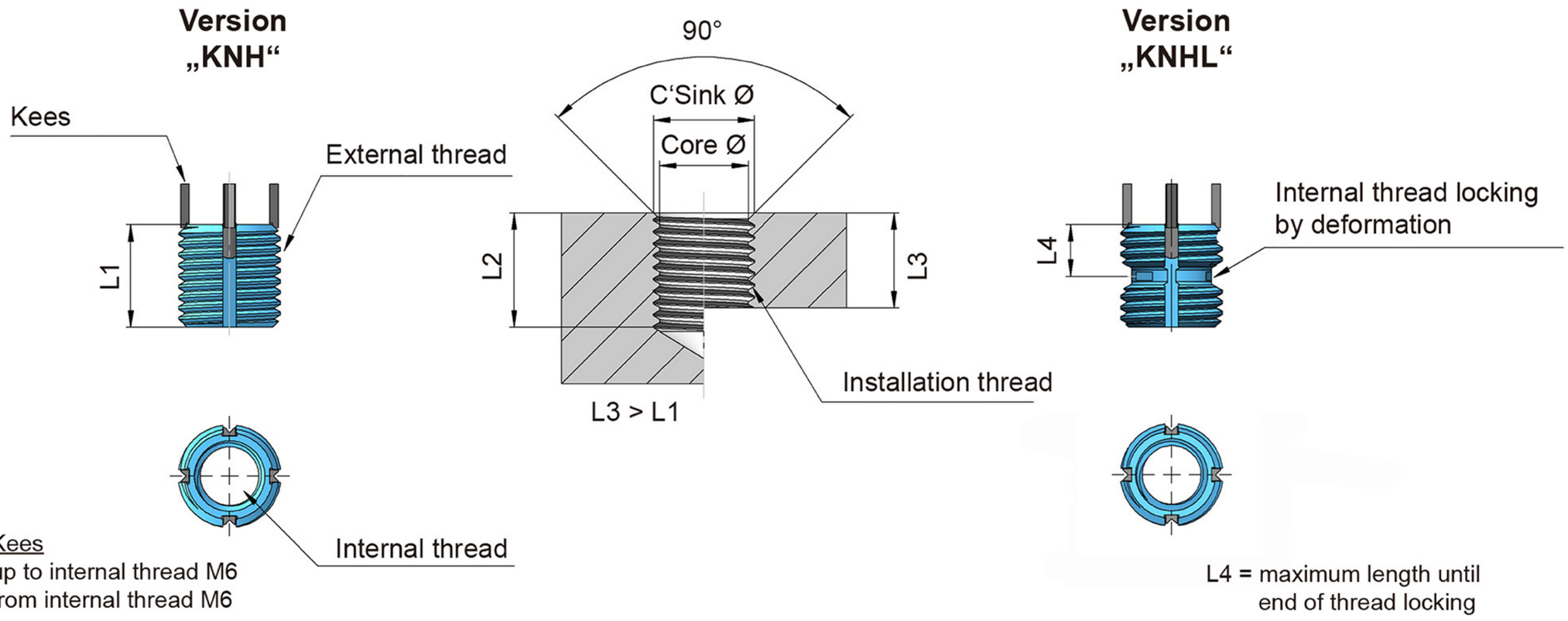


Quantity Kees
2 pieces up to internal thread M6
4 pieces from internal thread M6

| Part number | | Dimensions | | | | |
|---|---|---|---|---|---|---|
| Standard "KNH" | Self-locking "KNHL" | internal-thread Ø Tol.- 3B | outher-thread Ø Tol.- 2A mod. | Shear engagement inch² (mm²) | L1 inch (mm) | L4 inch (mm) |
| KNH518J | | 5/16-18 | 1/2-13 | 0,3588 (231,5) | 0,43 (10,9) | |
| | KNHL518J | | | 0,2608 (168,3) | | 0,37 (9,40) |
| KNH624J | | 3/8-24 | 9/16-12 | 0,4975 (321,0) | 0,50 (12,7) | |
| | KNHL624J | | | 0,3843 (248,0) | | 0,37 (9,40) |
| KNH616J | | 3/8-16 | 9/16-12 | 0,4975 (321,0) | 0,50 (12,7) | |
| | KNHL616J | | | 0,3843 (248,0) | | 0,41 (10,41) |
| KNH720J | | 7/16-20 | 5/8-11 | 0,7172 (462,7) | 0,62 (15,8) | |
| | KNHL720J | | | 0,5831 (376,2) | | 0,42 (10,67) |
| KNH714J | | 7/16-14 | 5/8-11 | 0,7172 (462,7) | 0,62 (15,8) | |
| | KNHL714J | | | 0,5831 (376,2) | | 0,46 (11,68) |

| Part number | Installation dimensions | | | | | Removal dimensions | |
|---|---|---|---|---|---|---|---|
| | modified Core-Ø* inch (mm) | C'Sink-Ø inch +0,01 (mm) +0,25 | Installation thread | | Hand installation tool part-no. | Drill | |
| | | | thread Tol.- UNC 2B | L2 min. inch (mm) | | Ø inch (mm) | Depth inch (mm) |
| KNH518J | 0,453 (11,51) | 0,510 (12,95) | 1/2-13 | 0,50 (12,7) | THD518L | 13/32 (10,32) | 3/16 (4,76) |
| KNHL518J | | | | | | | |
| KNH624J | 0,516 (13,11) | 0,572 (14,53) | 9/16-12 | 0,56 (14,2) | THD624L | 15/32 (11,91) | 3/16 (4,76) |
| KNHL624J | | | | | | | |
| KNH616J | 0,516 (13,11) | 0,572 (14,53) | 9/16-12 | 0,56 (14,2) | THD616L | 15/32 (11,91) | 3/16 (4,76) |
| KNHL616J | | | | | | | |
| KNH720J | 0,578 (14,68) | 0,635 (16,13) | 5/8-11 | 0,68 (17,27) | THD720L | 17/32 (13,49) | 3/16 (4,76) |
| KNHL720J | | | | | | | |
| KNH714J | 0,578 (14,68) | 0,635 (16,13) | 5/8-11 | 0,68 (17,27) | THD714L | 17/32 (13,49) | 3/16 (4,76) |
| KNHL714J | | | | | | | |

*the core Ø are different from SAE AS 8879

# KEY LOCKING INSERT
## Series KNH

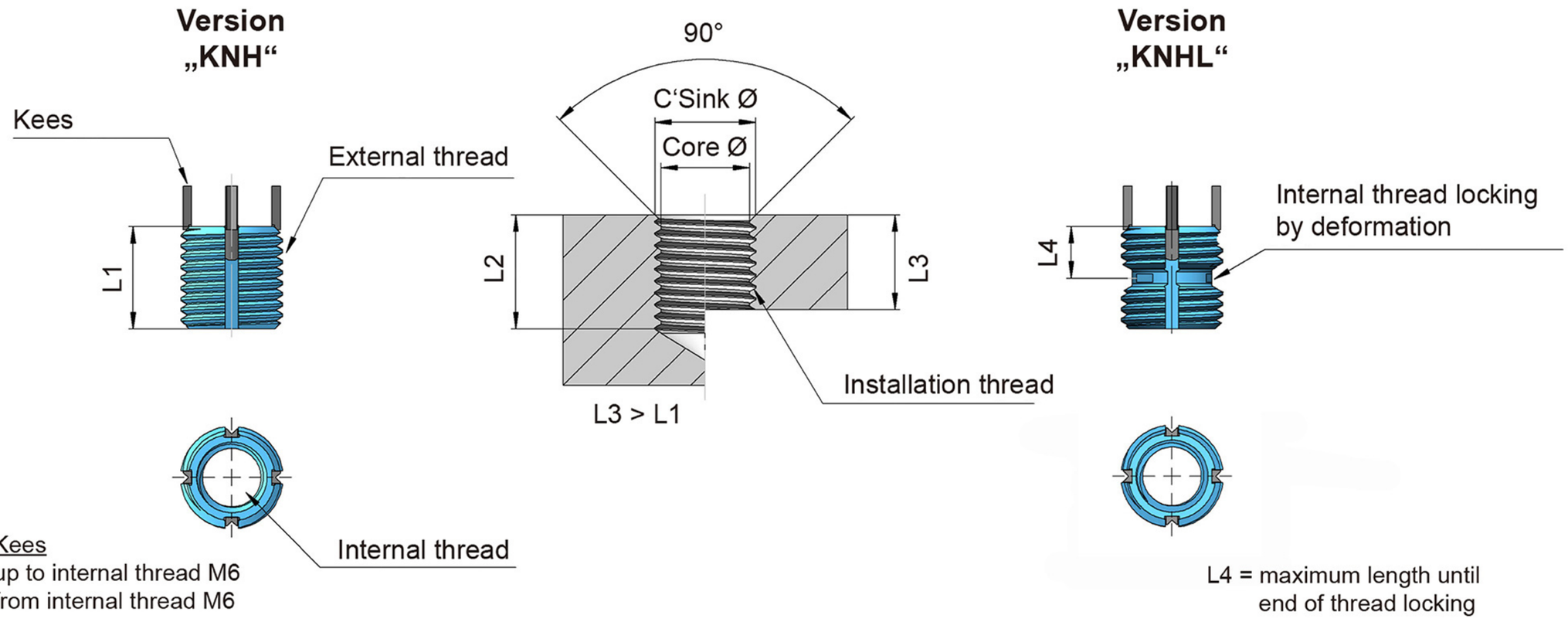


| Part number | | Dimensions | | | | |
|---|---|---|---|---|---|---|
| **Standard “KNH”** | **Self-locking “KNHL“** | **Internal thread Ø Tol.- 3B** | **External thread Ø Tol.- 2A mod.** | **Shear engagement inch² (mm²)** | **L1 inch (mm)** | **L4 inch (mm)** |
| KNH820J | | 1/2-20 | 11/16-11NS | 0,8884 (573,2) | 0,68 (17,3) | |
| | KNHL820J | | | 0,7368 (475,4) | | 0,42 (10,67) |
| KNH813J | | 1/2-13 | 11/16-11NS | 0,8884 (573,2) | 0,68 (17,3) | |
| | KNHL813J | | | 0,7368 (475,4) | | 0,47 (11,94) |
| KNH918J | | 9/16-18 | 13/16-16 | 1,2493 (806,0) | 0,81 (20,6) | |
| | KNHL918J | | | 1,0247 (661,1) | | 0,48 (12,19) |
| KNH912J | | 9/16-12 | 13/16-16 | 1,2493 (806,0) | 0,81 (20,6) | |
| | KNHL912J | | | 1,0247 (661,1) | | 0,54 (13,72) |
| KNH1018J | | 5/8-18 | 7/8-14 | 1,4866 (959,1) | 0,87 (22,1) | |
| | KNHL1018J | | | 1,2415 (801,0) | | 0,49 (12,47) |
| KNH1011J | | 5/8-11 | 7/8-14 | 1,4866 (959,1) | 0,87 (22,1) | |
| | KNHL1011J | | | 1,2415 (801,0) | | 0,57 (14,48) |

| Part number | Installation dimensions | | | | | Removal dimensions | |
|---|---|---|---|---|---|---|---|
| | **modified Core-Ø* inch (mm)** | **C’Sink-Ø inch +0,01 (mm) +0,25** | **Installation thread** | | **Hand installation tool part-no.** | **Drill** | |
| | | | Thread Tol. - UNC 2B | L2 min. inch (mm) | | Ø inch (mm) | Depth inch (mm) |
| KNH820J | 0,641 (16,28) | 0,700 (17,80) | 11/16-11NS | 0,75 (19,06) | THD820L | 19/32 (15,08) | 3/16 (4,76) |
| KNHL820J | | | | | | | |
| KNH813J | 0,641 (16,28) | 0,700 (17,80) | 11/16-11NS | 0,75 (19,06) | THD813L | 19/32 (15,08) | 3/16 (4,76) |
| KNHL813J | | | | | | | |
| KNH918J | 0,766 (19,46) | 0,822 (20,88) | 13/16-16UN | 0,94 (23,88) | THD918L | 23/32 (18,26) | 3/16 (4,76) |
| KNHL918J | | | | | | | |
| KNH912J | 0,766 (19,46) | 0,822 (20,88) | 13/16-16UN | 0,94 (23,88) | THD912L | 23/32 (18,26) | 3/16 (4,76) |
| KNHL912J | | | | | | | |
| KNH1018J | 0,828 (21,03) | 0,885 (22,48) | 7/8-14UNF | 1,00 (25,40) | THD1018L | 25/32 (19,84) | 3/16 (4,76) |
| KNHL1018J | | | | | | | |
| KNH1011J | 0,828 (21,03) | 0,885 (22,48) | 7/8-14 UNF | 1,00 (25,40) | THD1011L | 25/32 (19,84) | 3/16 (4,76) |
| KNHL1011J | | | | | | | |

*the core Ø are different from SAE AS 8879

# KEY LOCKING INSERT
## Series KNH

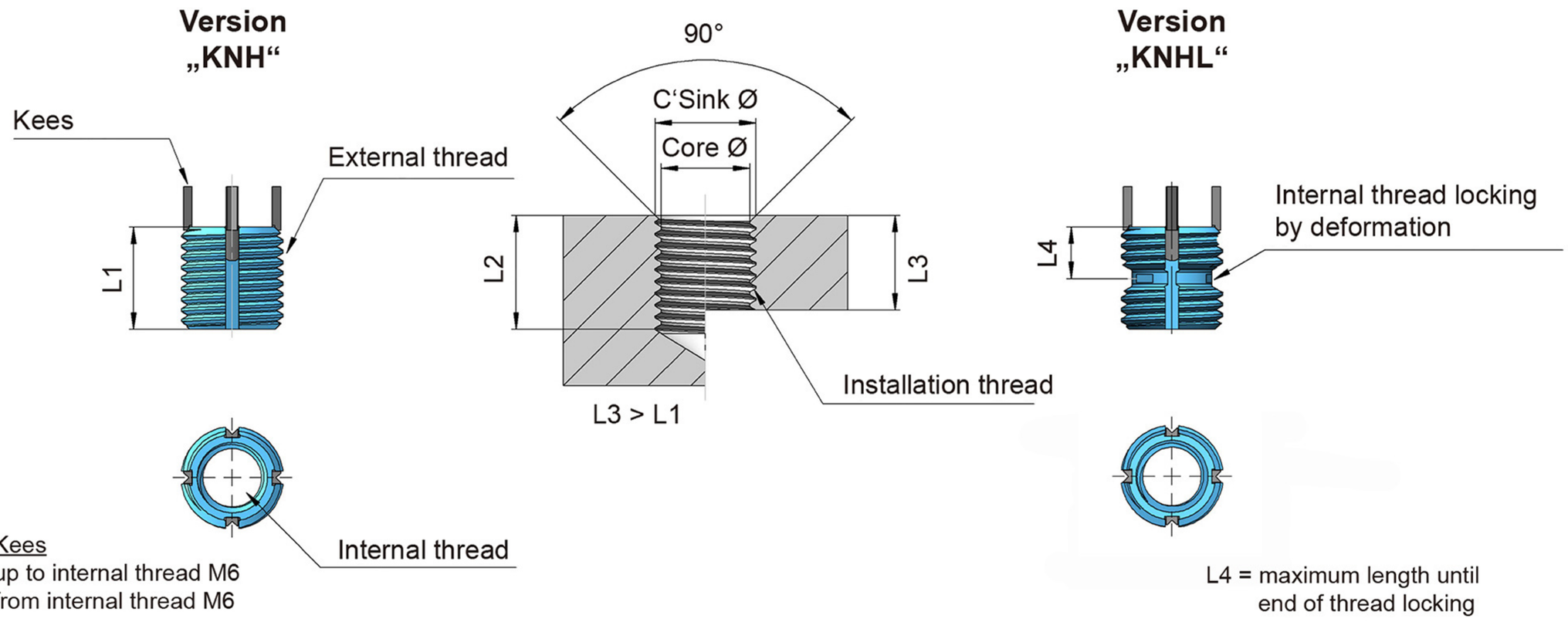


| Part number | | Dimensions | | | | |
|---|---|---|---|---|---|---|
| Standard “KNH” | Self-locking “KNHL“ | Internal thread Ø Tol.- 3B | External thread Ø Tol.- 2A mod. | Shear engagement inch² (mm²) | L1 inch (mm) | L4 inch (mm) |
| KNH1216J | | 3/4-16 | 1-1/8-12 | 2,4901 (1606,5) | 1,12 (28,5)<br>1,25 (31,8) | |
| | KNHL1216J | | | 2,4478 (1579,3) | | 0,68 (17,27) |
| KNH1210J | | 3/4-10 | 1-1/8-12 | 2,4901 (1606,5) | 1,12 (28,5)<br>1,25 (31,8) | |
| | KNHL1210J | | | 2,4478 (1579,3) | | 0,75 (19,05) |
| KNH1414J | | 7/8-14 | 1-1/4-12 | 3,1370 (2024,1) | 1,25 (31,8)<br>1,37 (34,8) | |
| | KNHL1414J | | | 3,0775 (1985,6) | | 0,69 (17,53) |
| KNH1409J | | 7/8-9 | 1-1/4/-12 | 3,1370 (2024,1) | 1,25 (31,8)<br>1,37 (34,8) | |
| | KNHL1409J | | | 3,0775 (1985,6) | | 0,77 (19,56) |
| KNH1612J | | 1-12 | 1-3/8-12 | 3,8381 (2476,3) | 1,37 (34,8)<br>1,50 (38,1) | |
| | KNHL1612J | | | 3,7929 (2447,0) | | 0,78 (19,81) |
| KNH1608J | | 1-8 | 1-3/8-12 | 3,8381 (2476,3) | 1,37 (34,8)<br>1,50 (38,1) | |
| | KNHL1608J | | | 3,7929 (2447,0) | | 0,86 (21,84) |

| Part number | Installation dimensions | | | | | Removal dimensions | |
|---|---|---|---|---|---|---|---|
| | modified Core-Ø* inch (mm) | C’Sink-Ø inch +0,01 (mm) +0,25 | Installation thread | | Hand installation tool part-no. | Drill | |
| | | | Thread Tol. - UNC 2B | L2 min. inch (mm) | | Ø inch (mm) | Depth inch (mm) |
| KNH1216J<br>KNHL1216J | 1,062 (26,97) | 1,145 (29,08) | 1-1/8-12 UNF | 1,31 (33,27)<br>1,44 (36,58) | THD1216L | 31/32 (24,61) | 5/16 (7,94) |
| KNH1210J<br>KNHL1210J | 1,062 (26,97) | 1,145 (29,08) | 1-1/8-12 UNF | 1,31 (33,27)<br>1,44 (36,58) | THD1210L | 31/32 (24,61) | 5/16 (7,94) |
| KNH1414J<br>KNHL1414J | 1,187 (30,15) | 1,270 (32,26) | 1-1/4-12 UNF | 1,44 (36,58)<br>1,56 (39,62) | THD1414L | 1-3/32 (27,78) | 5/16 (7,94) |
| KNH1409J<br>KNHL1409J | 1,187 (30,15) | 1,270 (32,26) | 1-1/4-12 UNF | 1,44 (36,58)<br>1,56 (39,62) | THD1409L | 1-3/32 (27,78) | 5/16 (7,94) |
| KNH1612J<br>KNHL1612J | 1,312 (33,32) | 1,395 (35,43) | 1-3/8-12 UNF | 1,56 (39,62)<br>1,68 (42,67) | THD1612L | 1-7/32 (30,96) | 5/16 (7,94) |
| KNH1608J<br>KNHL1608J | 1,312 (33,32) | 1,395 (35,43) | 1-3/8-12 UNF | 1,56 (39,62)<br>1,68 (42,67) | THD1608L | 1-7/32 (30,96) | 5/16 (7,94) |

*the core Ø are different from SAE AS 8879

# KEY LOCKING INSERT
## Series KNHXH

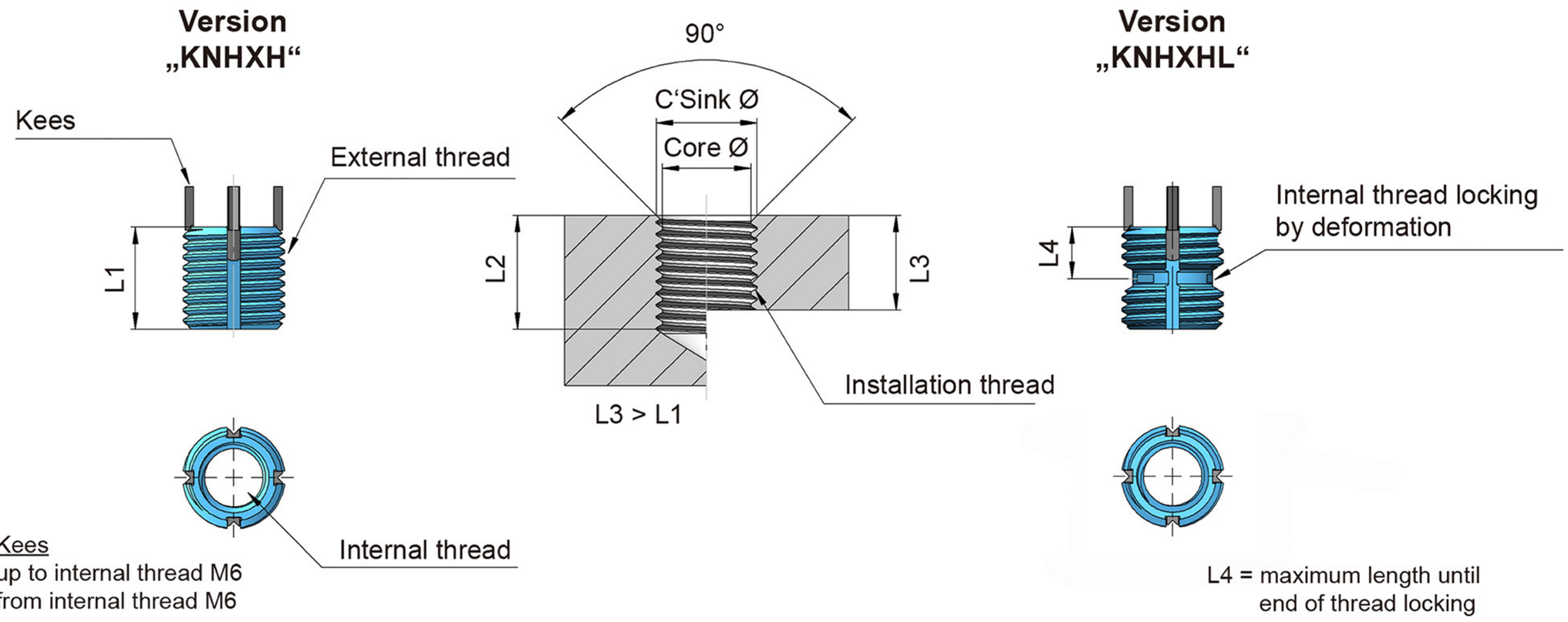


| Part number | | Dimensions | | | | |
|---|---|---|---|---|---|---|
| Standard “KNHXH” | Self-locking “KNHXHL“ | Internal thread Ø Tol.- 3B | External thread Ø Tol.- 2A mod. | Shear engagement inch² (mm²) | L1 inch (mm) | L4 inch (mm) |
| KNHXH1032J | | 10-32 | 7/16-14 | 0,2299 (148,3) | 0,31 (7,9) | |
| | KNHXHL1032J | | | 0,1403 (90,5) | | 0,31 (7,90) |
| KNHXH1024J | | 10-24 | 7/16-14 | 0,2299 (148,3) | 0,31 (7,9) | |
| | KNHXHL1024J | | | 0,1403 (90,5) | | 0,31 (7,90) |
| KNHXH428J | | 1/4-28 | 1/2-13 | 0,2997 (193,4) | 0,37 (9,4) | |
| | KNHXHL428J | | | 0,2005 (129,4) | | 0,33 (8,38) |
| KNHXH420J | | 1/4-20 | 1/2-13 | 0,2997 (193,4) | 0,37 (9,4) | |
| | KNHXHL420J | | | 0,2005 (129,4) | | 0,36 (9,14) |
| KNHXH524J | | 5/16-24 | 9/16-12 | 0,4163 (268,6) | 0,43 (10,9) | |
| | KNHXHL524J | | | 0,3029 (195,4) | | 0,34 (8,64) |

| Part number | Installation dimensions | | | | | Removal dimensions | |
|---|---|---|---|---|---|---|---|
| | modified Core-Ø* inch (mm) | C’Sink-Ø inch +0,01 (mm) +0,25 | Installation thread | | Hand installation tool part-no. | Drill | |
| | | | Thread Tol.- UNC 2B | L2 min. inch (mm) | | Ø inch (mm) | Depth inch (mm) |
| KNHXH1032J | 0,397 (10,08) | 0,447 (11,35) | 7/16-14 | 0,37 (9,40) | THXHD1032L | 11/32 (8,73) | 3/16 (4,76) |
| KNHXHL1032J | | | | | | | |
| KNHXH1024J | 0,397 (10,08) | 0,447 (11,35) | 7/16-14 | 0,37 (9,40) | THXHD1024L | 11/32 (8,73) | 3/16 (4,76) |
| KNHXHL1024J | | | | | | | |
| KNHXH428J | 0,453 (11,51) | 0,510 (12,95) | 1/2-13 | 0,44 (11,18) | THXHD428L | 13/32 (10,32) | 3/16 (4,76) |
| KNHXHL428J | | | | | | | |
| KNHXH420J | 0,453 (11,51) | 0,510 (12,95) | 1/2-13 | 0,44 (11,18) | THXHD420L | 13/32 (10,32) | 3/16 (4,76) |
| KNHXHL420J | | | | | | | |
| KNHXH524J | 0,516 (13,11) | 0,572 (14,53) | 9/16-12 | 0,50 (12,70) | THXHD524L | 15/32 (11,91) | 3/16 (4,76) |
| KNHXHL524J | | | | | | | |

*the core Ø are different from SAE AS 8879

# KEY LOCKING INSERT
## Series KNHXH

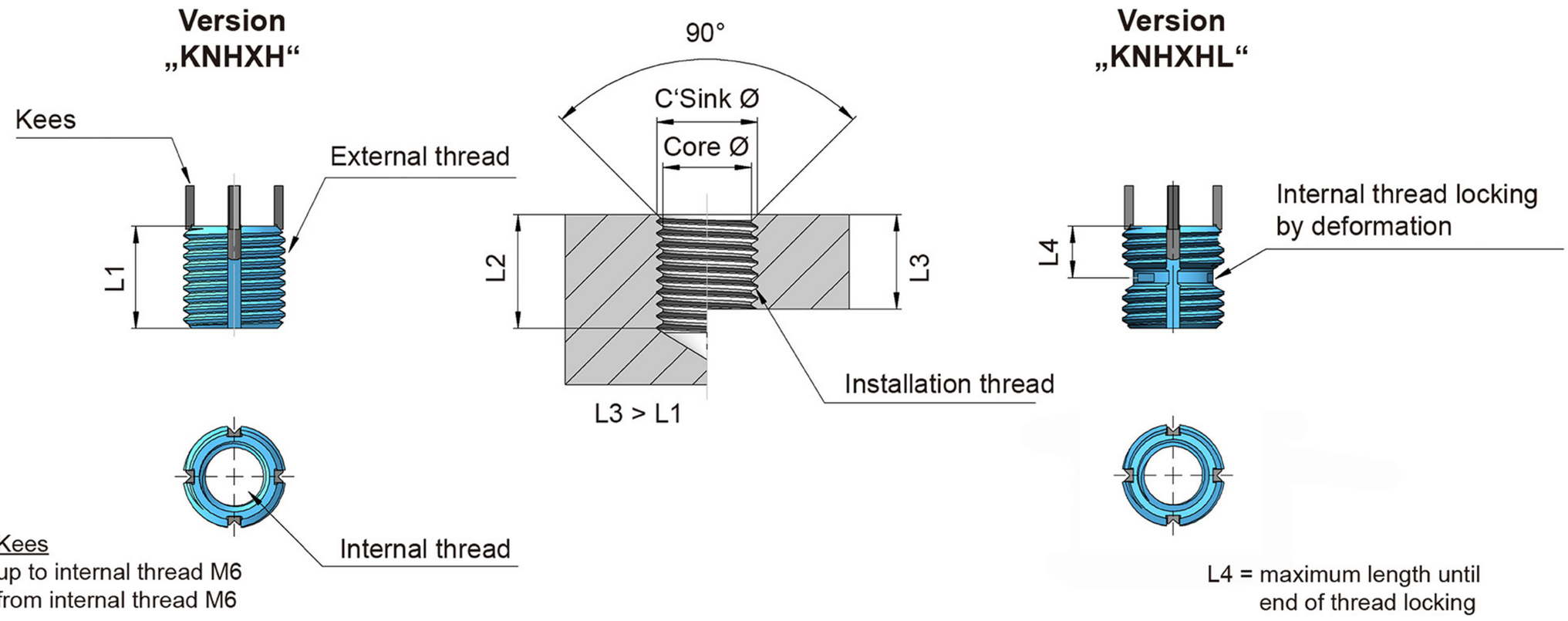


Quantity Kees
2 pieces up to internal thread M6
4 pieces from internal thread M6

| Part number | | Dimensions | | | | |
|---|---|---|---|---|---|---|
| Standard “KNHXH” | Self-locking “KNHXHL“ | Internal thread Ø Tol.- 3B | External thread Ø Tol.- 2A mod. | Shear engagement inch² (mm²) | L1 inch (mm) | L4 inch (mm) |
| KNHXH518J | | 5/16-18 | 9/16-12 | 0,4163 (268,6) | 0,43 (10,9) | |
| | KNHXHL518J | | | 0,3029 (195,4) | | 0,37 (9,40) |
| KNHXH624J | | 3/8-24 | 5/8-11 | 0,5584 (360,3) | 0,50 (12,7) | |
| | KNHXHL624J | | | 0,4234 (273,8) | | 0,37 (9,40) |
| KNHXH616J | | 3/8-16 | 5/8-11 | 0,5584 (360,3) | 0,50 (12,7) | |
| | KNHXHL616J | | | 0,4234 (273,8) | | 0,41 (10,41) |
| KNHXH720J | | 7/16-20 | 11/16-11 NS | 0,8000 (516,1) | 0,62 (15,6) | |
| | KNHXHL720J | | | 0,6498 (419,2) | | 0,42 (10,67) |
| KNHXH714J | | 7/16-14 | 11/16-11 NS | 0,8000 (516,1) | 0,62 (15,6) | |
| | KNHXHL714J | | | 0,6498 (419,2) | | 0,46 (11,68) |

| Part number | Installation dimensions | | | | | Removal dimensions | |
|---|---|---|---|---|---|---|---|
| | modified Core-Ø* inch (mm) | C’Sink-Ø inch +0,01 (mm) +0,25 | Installation thread | | Hand installation tool part-no. | Drill | |
| | | | Thread Tol.- UNC 2B | L2 min. inch (mm) | | Ø inch (mm) | Depth inch (mm) |
| KNHXH518J | 0,516 (13,11) | 0,572 (14,53) | 9/16-12 | 0,50 (12,70) | THXHD518L | 15/32 (11,91) | 3/16 (4,76) |
| KNHXHL518J | | | | | | | |
| KNHXH624J | 0,578 (14,68) | 0,635 (16,13) | 5/8-11 | 0,56 (14,22) | THXHD624L | 17/32 (13,49) | 3/16 (4,76) |
| KNHXHL624J | | | | | | | |
| KNHXH616J | 0,578 (14,68) | 0,635 (16,13) | 5/8-11 | 0,56 (14,22) | THXHD616L | 17/32 (13,49) | 3/16 (4,76) |
| KNHXHL616J | | | | | | | |
| KNHXH720J | 0,641 (16,28) | 0,700 (17,80) | 11/16-11 NS | 0,68 (17,27) | THXHD720L | 19/32 (15,08) | 3/16 (4,76) |
| KNHXHL720J | | | | | | | |
| KNHXH714J | 0,641 (16,28) | 0,700 (17,80) | 11/16-11 NS | 0,68 (17,27) | THXHD714L | 19/32 (15,08) | 3/16 (4,76) |
| KNHXHL714J | | | | | | | |
| KNHXH714J | 0,641 (16,28) | 0,700 (17,80) | 11/16-11 NS | 0,68 (17,27) | THXHD714L | 19/32 (15,08) | 3/16 (4,76) |
| KNHXHL714J | | | | | | | |

# KEY LOCKING INSERT
## Series KNHXH

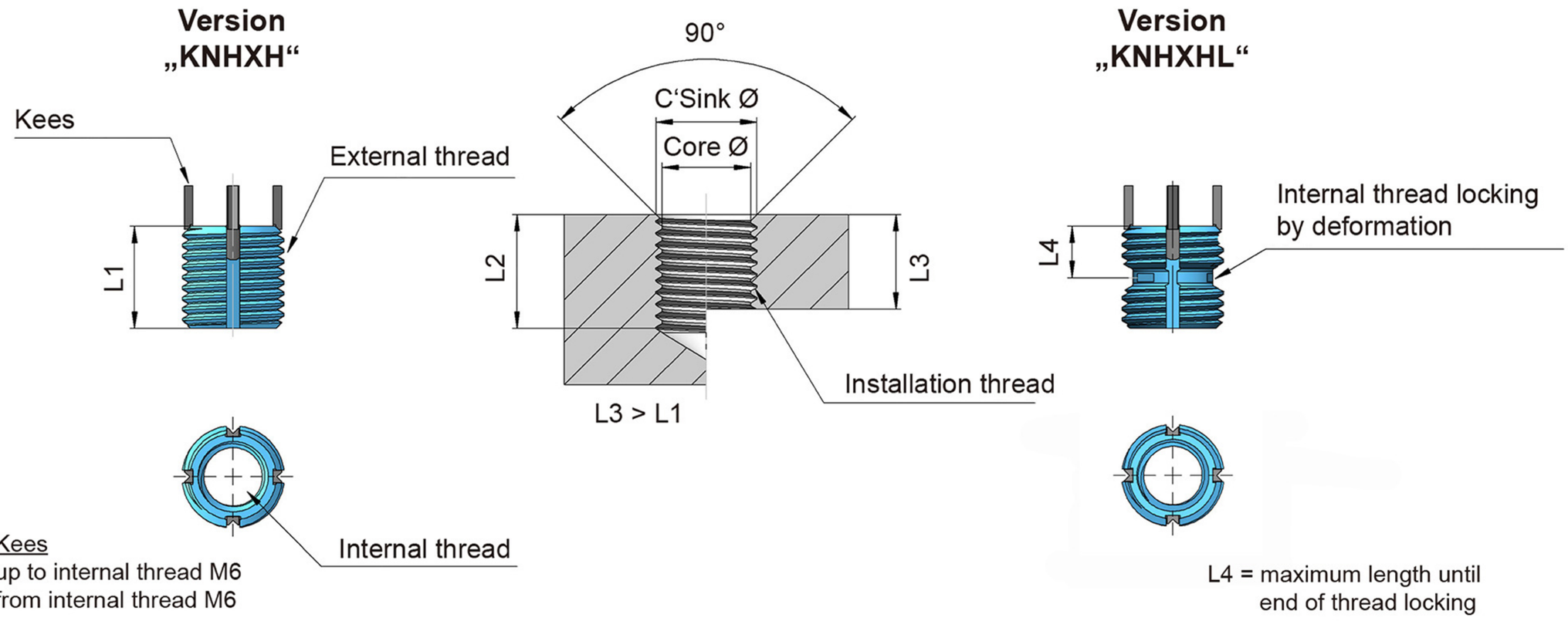


| Part number | | Dimensions | | | | |
|---|---|---|---|---|---|---|
| Standard “KNHXH” | Self-locking “KNHXHL“ | Internal thread Ø Tol.- 3B | External thread Ø Tol.- 2A | Shear engagement inch² (mm²) | L1 inch (mm) | L4 inch (mm) |
| KNHXH820J | | 1/2-20 | 13/16-16 | 1,0293 (664,1) | 0,68 (17,3) | |
| | KNHXHL820J | | | 0,8642 (557,6) | | 0,42 (10,67) |
| KNHXH813J | | 1/2-13 | 13/16-16 | 1,0293 (664,1) | 0,68 (17,3) | |
| | KNHXHL813J | | | 0,8642 (557,6) | | 0,47 (11,94) |
| KNHXH918J | | 9/16-18 | 7/8-14 | 1,3761 (887,8) | 0,81 (20,6) | |
| | KNHXHL918J | | | 1,1131 (718,1) | | 0,48 (12,19) |
| KNHXH912J | | 9/16-12 | 7/8-14 | 1,3761 (887,8) | 0,81 (20,6) | |
| | KNHXHL912J | | | 1,1131 (718,1) | | 0,54 (13,72) |
| KNHXH1018J | | 5/8-18 | 1-12 | 1,6420 (1059,4) | 0,87 (22,1) | |
| | KNHXHL1018J | | | 1,2770 (823,9) | | 0,51 (12,95) |
| KNHXH1011J | | 5/8-11 | 1-12 | 1,6420 (1059,4) | 0,87 (22,1) | |
| | KNHXHL1011J | | | 1,2770 (823,9) | | 0,59 (14,99) |

| Part number | Installation dimensions | | | | | Removal dimensions | |
|---|---|---|---|---|---|---|---|
| | modified Core-Ø* inch (mm) | C’Sink-Ø inch +0,01 (mm) +0,25 | Installation thread | | Hand installation tool part-no. | Drill | |
| | | | Thread Tol.- UNC 2B | L2 min. inch (mm) | | Ø inch (mm) | Depth inch (mm) |
| KNHXH820J | 0,766 (19,46) | 0,822 (20,88) | 13/16-16 UNF | 0,75 (19,05) | THXHD820L | 23/32 (18,26) | 3/16 (4,76) |
| KNHXHL820J | | | | | | | |
| KNHXH813J | 0,766 (19,46) | 0,822 (20,88) | 13/16-16 UNF | 0,75 (19,05) | THXHD813L | 23/32 (18,26) | 3/16 (4,76) |
| KNHXHL813J | | | | | | | |
| KNHXH918J | 0,828 (21,03) | 0,885 (22,48) | 7/8-14 UNF | 0,94 (23,88) | THXHD918L | 25/32 (19,84) | 3/16 (4,76) |
| KNHXHL918J | | | | | | | |
| KNHXH912J | 0,828 (21,03) | 0,885 (22,48) | 7/8-14 UNF | 0,94 (23,88) | THXHD912L | 25/32 (19,84) | 3/16 (4,76) |
| KNHXHL912J | | | | | | | |
| KNHXH1018J | 0,937 (23,80) | 1,020 (25,91) | 1-12 UNF | 1,00 (25,40) | THXHD1018L | 27/32 (21,43) | 5/16 (7,94) |
| KNHXHL1018J | | | | | | | |
| KNHXH1011J | 0,937 (23,80) | 1,020 (25,91) | 1-12 UNF | 1,00 (25,40) | THXHD1011L | 27/32 (21,43) | 5/16 (7,94) |
| KNHXHL1011J | | | | | | | |

*the core Ø are different from SAE AS 8879

# KEY LOCKING INSERT
## Series KNHXH

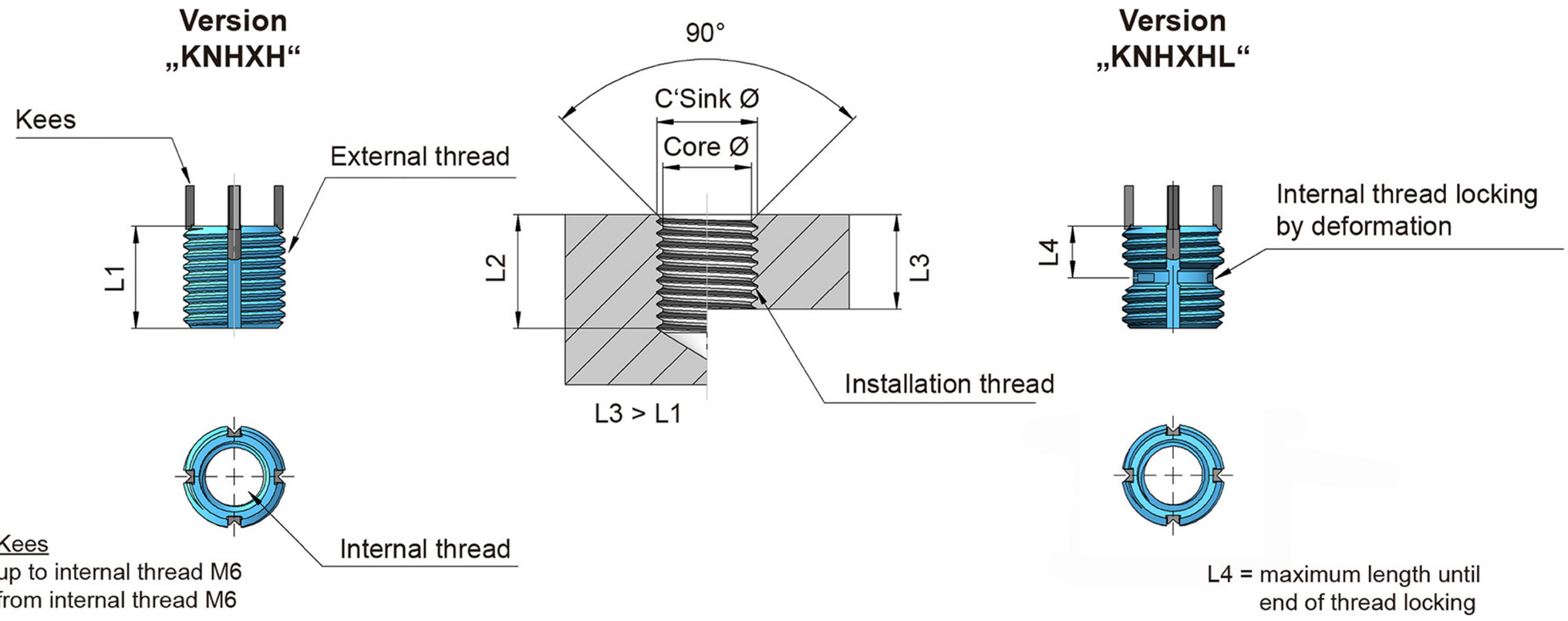


| Part number | | Dimensions | | | | |
|---|---|---|---|---|---|---|
| Standard “KNHXH” | Self-locking “KNHXHL” | Internal thread Ø Tol.- 3B | External thread Ø Tol.- 2A | Shear engagement inch² (mm²) | L1 inch (mm) | L4 inch (mm) |
| KNHXH1216J | | 3/4-16 | 1-1/4-12 | 2,7966 (1804,2) | 1,12 (28,5) 1,25 (31,8) | |
| | KNHXHL1216J | | | 2,5505 (1645,5) | | 0,57 (14,48) |
| KNHXH1210J | | 3/4-10 | 1-1/4-12 | 2,7966 (1804,2) | 1,12 (28,5) 1,25 (31,8) | |
| | KNHXHL1210J | | | 2,5505 (1645,5) | | 0,64 (16,26) |
| KNHXH1414J | | 7/8-14 | 1-3/8-12 | 3,4652 (2235,6) | 1,25 (31,8) 1,37 (34,8) | |
| | KNHXHL1414J | | | 3,2769 (2114,1) | | 0,63 (16,00) |
| KNHXH1409J | | 7/8-9 | 1-3/8-12 | 3,4652 (2235,6) | 1,25 (31,8) 1,37 (34,8) | |
| | KNHXHL1409J | | | 3,2769 (2114,1) | | 0,71 (18,03) |
| KNHXH1612J | | 1-12 | 1-1/2-12 | 4,2374 (2733,8) | 1,37 (34,8) 1,50 (38,1) | |
| | KNHXHL1612J | | | 4,2135 (2718,4) | | 0,70 (17,78) |
| KNHXH1608J | | 1-8 | 1-1/2-12 | 4,2374 (2733,8) | 1,37 (34,8) 1,50 (38,1) | |
| | KNHXHL1608J | | | 4,2135 (2718,4) | | 0,78 (19,81) |

| Part number | Installation dimensions | | | | | Removal dimensions | |
|---|---|---|---|---|---|---|---|
| | modified Core-Ø* inch (mm | C’Sink-Ø inch +0,01 (mm) +0,25 | Installation thread | | Hand installation tool part-no. | Drill | |
| | | | Thread Tol. - UNC 2B | L2 min. inch (mm) | | Ø inch (mm) | Depth inch (mm) |
| KNHXH1216J<br>KNHXHL1216J | 1,187 (30,15) | 1,270 (32,26) | 1-1/4-12 UNF | 1,31 (33,27) 1,44 (36,58) | THXHD1216L | 1-3/32 (27,78) | 5/16 (7,94) |
| KNHXH1210J<br>KNHXHL1210J | 1,187 (30,15) | 1,270 (32,26) | 1-1/4-12 UNF | 1,31 (33,27) 1,44 (36,58) | THXHD1210L | 1-3/32 (27,78) | 5/16 (7,94) |
| KNHXH1414J<br>KNHXHL1414J | 1,312 (33,32) | 1,395 (35,43) | 1-3/8-12 UNF | 1,44 (36,58) 1,56 (39,62) | THXHD1414L | 1-7/32 (30,96) | 5/16 (7,94) |
| KNHXH1409J<br>KNHXHL1409J | 1,312 (33,32) | 1,395 (35,43) | 1-3/8-12 UNF | 1,44 (36,58) 1,56 (39,62) | THXHD1409L | 1-7/32 (30,96) | 5/16 (7,94) |
| KNHXH1612J<br>KNHXHL1612J | 1,437 (36,50) | 1,520 (38,61) | 1-1/2-12 UNF | 1,56 (39,62) 1.68 (42,67) | THXHD1612L | 1-11/32 (34,13) | 5/16 (7,94) |
| KNHXH1608J<br>KNHXHL1608J | 1,437 (36,50) | 1,520 (38,61) | 1-1/2-12 UNF | 1,56 (39,62) 1.68 (42,67) | THXHD1608L | 1-11/32 (34,13) | 5/16 (7,94) |

*the core Ø are different from SAE AS 8879